1. Consider the following differential amplifier where the small-signal input is applied to the bulk of M_1 and M_2. For V_{bias1}=1.4V, and assuming that V_{bias2} is properly chosen so that all transistors are operating in their saturation region, calculate the small-signal differential gain of the amplifier.]

Recall that $g_{mb} = \eta g_m$.
Assume, $\lambda = 0$, η=0.2, $|V_{THPMOS}|$= 0.6V (the threshold value is in the presence of body effect), $\mu_p C_{ox}$=100 $\mu A/V^2$, R_D=1kΩ, $(W/L)_0$= 40, $(W/L)_1$=$(W/L)_2$= 20, and V_{DD}=3V.

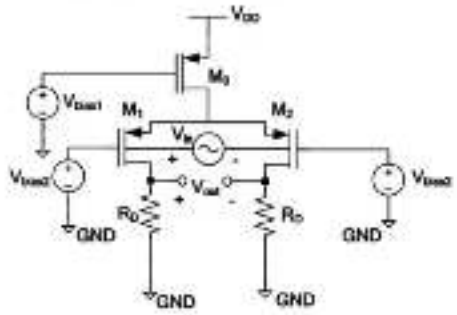

$$I_{D_1} = \frac{1}{2} \mu_p C_{ox} \cdot \left(\frac{W}{L}\right)_1 \cdot V_{eff_1}^2$$

$$V_{eff_1} = V_{GS} - V_{th}$$

$$V_G - V_S = 1.6$$

$$V_G = 1.6 + 0.8 = 2.4V$$

$$V_{bias_2} = 2.4V$$

M_1: $V_{DS} > V_{GS} - V_{th}$

$$V_D - \cancel{V_S} > V_G - \cancel{V_S} - V_{th}$$

$$V_G = V_D + V_{th}$$

$$V_D = V_G - V_{th}$$

M_0: $V_D = 1.4 - 0.6 = 0.8$

Saturation

$$I_{D_1} = \frac{1}{2} \cdot 100 \times 10^{-6} \cdot 20 \cdot 1^2$$

$$= 1mA$$

Recall that $g_{mb} = \eta g_m$.

$$A_v = \frac{V_{out+} - V_{out-}}{V_{in}} = -g_{mb} \cdot R_D = -\eta \cdot g_m \cdot R_D$$

$$= -\eta \cdot \sqrt{2 \mu_p C_{ox} \left(\frac{W}{L}\right)_1 \cdot I_{D_1}} \cdot R_D$$

$$= -0.2 \cdot \sqrt{2 \cdot 100 \times 10^{-6} \cdot 20 \cdot 1mA} \cdot 1k\Omega$$

$$= -0.4 \, V/V$$

2. In the following circuit all transistors have a W/L of 7μm/0.35μm and M_1 and M_2 are to operate in deep triode region with an on-resistance of 2k Ω. Assume: $I_S = 40$ μA and $\lambda = \gamma = 0$, $V_{DD} = 3$ V, $V_{TH(NMOS)} = 0.5$ V, $V_{TH(PMOS)} = -0.6$ V, $\mu_n C_{ox} = 200$ μA/V², $\mu_p C_{ox} = 100$ μA/V².

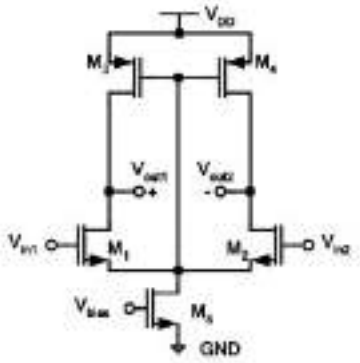

a) Calculate the dc level of the input (input common-mode level) that yields such on-resistance.
b) Calculate the small-signal differential gain, i.e., $(V_{out1}-V_{out2})/(V_{in1}-V_{in2})$, of the circuit when the input common-mode level is equal to value calculated in part a.

a) $I = \mu_p C_{ox} \frac{W}{L} V_{eff} \cdot V_{SD}$, $R_{on} = \frac{V_{SD}}{I} = \frac{1}{\mu_p C_{ox} \frac{W}{L} V_{eff}}$

$\hookrightarrow 2k\Omega = \frac{1}{100\times10^{-6} \cdot \frac{7}{0.35} \cdot V_{eff}} \rightarrow V_{eff} = 0.25V$

$V_{SG_3} = 0.6 + 0.25 = 0.85V \rightarrow V_{G_3} = 3 - 0.85V = 2.15V$

$I_1 = \frac{I_S}{2} = \frac{40nA}{2} = 20nA = \frac{1}{2}\mu_n C_{ox} \frac{W}{L} (V_{eff_1})^2 \rightarrow V_{eff_1} = 0.1V$

$V_{GS_1} = V_{thn} + V_{eff_1} = 0.5V + 0.1V = 0.6V$

$V_{i(\text{common mode})} = V_{GS_1} + V_{S_1} = 0.6V + 2.15V = 2.75V$

b) $A_v = -g_{m_1} \cdot R_D = \frac{2 \cdot 20\times10^{-6}}{0.1} \cdot 2k\Omega = 0.8 V/V$

3. Consider the following wide-swing cascode current source. Assume that all NMOS transistors have the same size and $I_1 = I_2 = I_{out} = 1$ mA. Furthermore, assume that the minimum voltage headroom required at the output node is 0.5 V (i.e., for output voltage as low as 0.5 V both transistors M_3 and M_6 are in saturation). The technology parameters are:

$\lambda_{(NMOS)} = \lambda_{(PMOS)} = 0\ V^{-1}$, $\gamma = 0$, $V_{DD} = 1.8$ V, $V_b = 1.25$ V, $V_{THNMOS} = |V_{THPMOS}| = 0.35$ V, $\mu_n C_{ox} = 1\ mA/V^2$, $\mu_p C_{ox} = 0.5\ mA/V^2$.

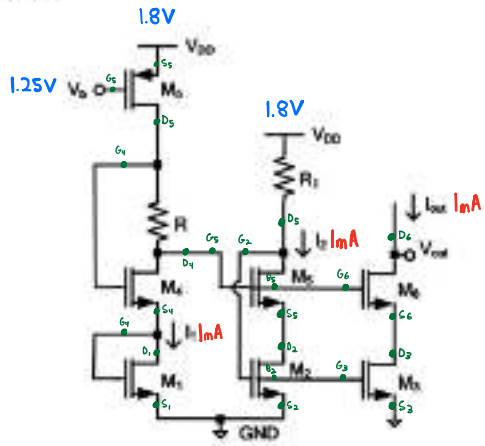

$-V_{DS} > V_{GS} - V_{th}$ SATURATION (Active)

channel is pinched off.

$$I_D = \frac{1}{2}\mu_n C_{ox}\frac{W}{L}(V_{GS} - V_{TH})^2$$

Find the aspect ratio of the PMOS transistor and the NMOS transistors as well as the value of R and R_1.

Same NMOS

$V_{out} = V_{DS6} + V_{DS3} \rightarrow V_{outmin} = V_{DS6min} + V_{DS3min} \rightarrow 0.5V = V_{DS6min} + V_{DS3min}$

$= 0.25V + 0.25V$

$I_{out} = I_{D3} = I_{D6} = \frac{1}{2} \cdot 1\times10^{-3} \cdot \left(\frac{W}{L}\right) \cdot V_{eff}^2 = 1mA$

For Saturation: $V_{DS} > V_{GS} - V_{th}$

$V_{GS} = V_{DS} + V_{th}$

$= 0.25 + 0.35 = 0.6V$

$\therefore V_{eff}$ for $M_6, M_3 = 0.6 - 0.35 = 0.25V$

For M_3, M_6: $1mA = \frac{1}{2} \cdot 1\times10^{-3} \cdot \left(\frac{W}{L}\right) \cdot 0.25^2 \longrightarrow \left(\frac{W}{L}\right)_{NMOS} = 32$

M_5, M_2: $V_{DS} = 0.25V \therefore V_{DS} = 0 + 0.25V + 0.25V = 0.5V$

$\hookrightarrow \frac{1.8V - 0.5V}{R_1} = 1mA \rightarrow R_1 = 1.3k\Omega$

M_5 in Saturation: $V_{SG} = 1.8V - 1.25V = 0.55V$, $V_{SD} = 0.55 - 0.35 = 0.2V$

$V_{SD} = 0.2V = 1.8 - V_D \therefore V_D = 1.6V \rightarrow \frac{1.6 - 0.5}{R} = 1mA \rightarrow R = 1.1k\Omega$

$1mA = \frac{1}{2} \cdot 0.5\times10^{-3} \cdot \left(\frac{W}{L}\right) \cdot (0.55 - 0.35)^2 \longrightarrow \left(\frac{W}{L}\right)_{PMOS} = 100$